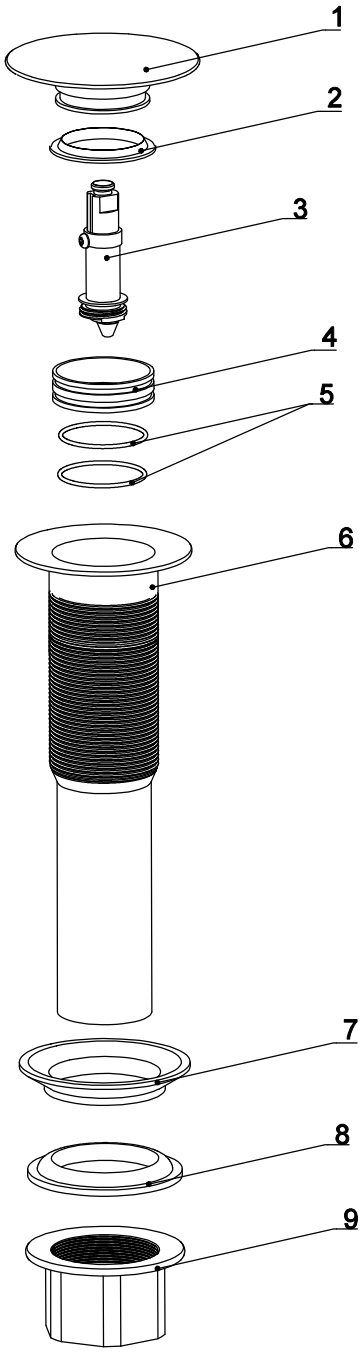

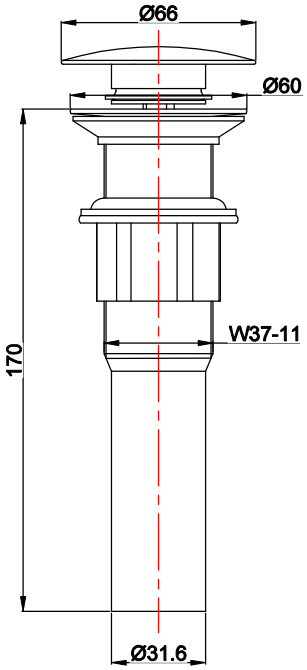

Item	Part Name	Material	Qty
9	Hexagonal Sleeve	Zinc Alloy	1
8	Silicone Drain Washer	Silicone	1
7	Upper Gasket	Silicone	1
6	Drain Body	304	1
5	O-Ring	NBR	2
4	Drain Basket	HPb57-3	1
3	Pop-Up Mechanism	HPb57-3	1
2	Sealing Ring	NBR	1
1	Round Cap	304	1

GEN. TOL. (mm)					
	≥0.5–6	±0.3			
	≥6–30	±0.5			
	≥30–120	±0.8			
	≥120–400	±1.2			
	≥400–1000	±2.0	Rev./No.	Change Description	
Drawn By	Wang Haijun			20260704	
Checked By					
Approved By					

Critical Dims
Polishing Line

Material:			
Scale	NTS		
Weight (g)	Blank	Machined	Finished
Sheet 1 of 1		Revision	V00

Product Name:	Pop-Up Basin Drain (Without Overflow)
Drawing No.:	
Model:	A113-SS
Order No.:	